CONFIRMATORY FACTORIAL MODEL OF THE ADMINISTRATION OF PERCEIVED SECURITY AGAINST COVID-19

María del Rosario Molina-González[1*], Oscar Coronado Rincón[2], Cruz Garcia Lirios[3], Adriana Vanessa Blanes Ugarte[4]

*[*1,2,3,4]Department of Legal Sciences, University of Sonora, Mexico*

***Corresponding Author:** María del Rosario Molina-González

ABSTRACT:

The administration of public safety has become relevant in a scenario where health authorities do not have an approximate record of the violence triggered by confinement policies. The aim of this study was to confirm the factor structure reported in the literature. A cross-sectional, factorial and confirmatory study was carried out with a selection of 100 students from a public university, with labor income since confinement and life as a couple. The results confirm an emerging structure that the literature identifies as public security administration and four second-order factors identified as public, citizen, private, and Internet user dimensions that explained 45% of the total variance. In relation to the studies of security administration, the assumption that the respondents differentiate the dimensions to attribute responsibilities to each phenomenon is corroborated.

Keywords: *Risk Perception, Structure, Factor, Model, Exploratory*

Introduction

The pandemic activated mitigation and containment policies for people that had an impact on risk scenarios such as citizen security (Espinoza et al., 2022). In this sense, social distancing and confinement had an impact on the reduction of homicides, assaults and kidnappings, but increased extortion and fraud. Consequently, the public security strategies derived from the pandemic were ambivalent regarding the citizen's perception of risks. In this way, the approach to the problem opens the discussion around the impact of COVID-19 on the perception of risks of the governed in the face of anti-COVID-19 and security policies.

The objective of the present study was to validate the instrument that measures the perception of security administration and its dimensions reported in the literature from 2019 to 2022.
Are there significant differences between the dimensions reported in the literature with respect to the observations and analyzes of the present work?

The premises that guide the present work suggest that the pandemic increased the risks of public security, even when the media reported the reduction in cases of homicides, kidnappings or robberies, the perception of the governed intensified and oriented towards Internet security. (Carreon et al., 2013). In this way, extortions through electronic networks became present, adding to the risk expectations of citizens. Consequently, citizen security was established as biased perceptions or expectations of security in the face of pandemic mitigation and containment policies, as well as its structure of indicators related to national, human, public, citizen, private and Internet security.

Security Management Theory

The theoretical and conceptual matrices of public security administration extend to dimensions that the literature identifies as: national, territorial, human, public, citizen, private and internet user (Carreon et al., 2017). According to the approach of the public administration, security is a central axis in the political agendas regardless of their ideology because their projects depend on the credibility of the voters and thus on their certainty of unambiguous management in the face of any organized crime. In fact, the pact between authorities and criminals is seen as insecure by citizens and a vote of punishment for the administration in power. Therefore, the security dimensions must be recognizable in order to attribute responsibilities to the levels of government.

In this way, territorial and national security are central axes of international geopolitics with an impact on citizens that follow logics of informative verifiability in the media and national or global networks (Carreon et al., 2013). Consequently, a national and territorial security policy must consider the reaction of the informed sectors and their influence on those who follow a logic of credible information. In other words, a strategy of closing borders to migrants under the argument that they threaten territorial or national security has a direct impact on voters with access to the media coverage of the expelling countries. The inescapable comparison between local, national and international media coverage results in a judgment of insecurity or security that can be illustrated with some statements by officials. Next, the territorial or national security policy translates into the inability of the public administration to manage the risks inherent in the closure of borders, such as the condemnation of local and global public opinion.

The administration of human and public security is distinguished by involving transcultural projects that can lead to transnational projects (Coronado et al., 2022). In the case of Mexico, human security can be reflected in policies to contain migration, but it can be extended to policies to care for migrants in the United States. In this way, public security would translate into migration as a phenomenon of containment and attention. The journey of the migrants illustrates the phases of the administration of human and public security. The effect of these transnational and transcultural policies suggests greater media coverage and therefore a dissemination of strategies in digital communities. The logic of dissemination, whether of credibility or verifiability, would result in greater coverage and expectation.

The citizen and private dimension are compatible because the State and its institutions delegate private security to private initiative or to the individual, although citizen security is a favorable complement (Hernandez et al., 202). If the State directs its security policies towards the protection of citizens, then private security would decrease, but the literature indicates that it rather increases due to the relationship of mistrust between the parties involved. Therefore, private security is an indicator of security management. A reduction in the demand for private security implies greater confidence, but an increase suggests a propensity for risk generated by the State

and its policies.

Internet security has been the dimension with the greatest study due to the mediation of technologies, devices and electronic networks (Aguayo et al., 2022). This is a non-tangible dimension of security administration, but it is visible in terms of the impact of Internet opinion regarding the performance of the State in the other dimensions of security. In this way, Internet security becomes more relevant as it is an area of management, production and transfer of information than for being a repository of convergence between the governors and the governed.

In short, the theory of public administration wanders between the management of territorial risk areas to the transfer of content on the Internet, but it is in the public and citizen dimension where it finds its crossroads as the axis of the public agenda or as a sender of preventive strategies. and containment.

Security Management Studies

The literature published from 2019 to 2022 collects findings related to the dimensions of security: human, national, territorial, public, citizen, private and Internet, although it adds a new dimension alluding to the pandemic, and which is known as environmental security to relate it to the impact of zoonoses on human activity (Carreon et al., 2014). In this way, security continues to be the central axis of the public agenda. The relationship between the rulers and the ruled is regulated by security systems, but a new dimension underlies the pandemic that explains the prevention of risks of contagion, disease and death from COVID-19. Consequently, the security dimensions remain in their ranges of importance, although they are reoriented towards the mitigation and containment of the community transmission of the new SARS CoV-2 coronavirus.

The literature mentions that territorial security acquired a new sense of border closure to prevent the spread of COVID-19, even when such a strategy did not contain the pandemic (Espinoza et al., 2020). In addition, territorial security advanced towards the regulation of migratory flows as carriers of the coronavirus and their attempts to reach countries before, during and after the pandemic. In this sense, national security translated into strategies of confinement and distancing. National security was legitimized from the stigma towards poor countries with respect to the governed and rulers of rich countries. The phenomenon had already been observed with the NH1 influenza pandemic, although with COVID-19 the perceptual risk biases associated with cultures, carriers and professionals were appreciated.

Human security was also impacted by the pandemic (Martínez et al., 2019). The increase in hours at home in a compulsory way impacted the relationships between people. Consequently, intramural violence went from being a family phenomenon to being translated into a public agenda of national and international interest. During the days of confinement, humans were involved in uncertainty about the evolution of the pandemic and the supply of resources. The increase in the consumption of products translated into an exhaustive demand. Human security and public safety were distinguished by the degree of impact of the pandemic on localities and households.

Regarding citizen and private security, the pandemic led to a biased chain of opinions and protection measures that increased conflicts between people, as well as between residents and migrants (Lirios et al., 2020). The health sector and public or private health care professionals were stigmatized and threatened in their entirety by being considered carriers of COVID-19. The State implemented security protocols for health professionals in the most critical moments of the pandemic, although the stigma had already been observed in other epidemiological risk events, the pandemic of the new SARS CoV-2 coronavirus intensified personal security measures, family and neighborhood.

The literature from 2019 to 2022 that observed Internet security increased its reports by pointing out that extortion was the main risk for users of digital networks (Coronado et al., 2022). Fake news preceded extortion, identity theft and harassment, but it was the State that tried to generate a change of heart in its anti-COVID-19 policies by diverting attention towards shared responsibility.

Security Management Model

Based on the theoretical, conceptual and empirical frameworks, an explanatory model of the dimensions of perceived safety is proposed (Molina et al., 2019). Dimensions related to humanity, the territory, the nation, the public, citizenship, the Internet and the pandemic are included. A first proposal is to include each of the dimensions as a second-order reflection. In other words, security as the guiding axis of the relations between the

governors and the governed would be indicated by each of the exposed dimensions, although the literature recommends a hybrid structure where human, territorial and national security are abstractions that would determine specific risk biases. In this way, the proposal suggests a model of predecessor variables that influence predictor variables of Internet user security. Public, citizen and private security as moderators of the antecedent variables would explain the increase in extortion on the Internet.

Methodology

A cross-sectional, psychometric and correlational study was carried out with a sample of 100 students (M = 21.3 SD = 2.3 age and M = 1'897.12 SD = 234.35 USD monthly income) in academic, professional and work training through social service and professional practices. Based on the strategic alliances between a public university in central Mexico and micro, small and medium-sized companies related to the prevention and care of the pandemic, the sample was selected.

The Carreón Corporate Governance Inventory (2022) was used, which includes the measurement of security administration. 16 items correspond to dimensions related to territorial security (COVID-19 exacerbated the closure of borders to migrants"), national ("COVID-19 threatens national identity"), human ("COVID-19 is an effort for the survival of our species"), public ("COVID-19 will cause violence in confinement"), citizen ("COVID-19 will impact the mental health of those who suffer from being locked up"), private ("COVID -19 forced my self-confinement") and Internaut ("COVID-19 spread through fake news"). Each item is answered with one of five options: 0 = "I do not agree at all" to 5 = "I quite agree" The reliability of the instrument ranges between .774 and .798, although in the present work it reached a Cronbach's alpha value of .780 The validity includes the dimensions reported in the literature correlated with its items from .389 to .654, but in the present study it ranged between .326 and .678

Respondents were contacted through their institutional email, with prior written guarantee of the confidentiality and anonymity of their responses to the instrument. The Helsinki and APA protocol was followed for the study with human capital. The data was captured in Excel and processed in JASP version 14. The reliability, adequacy, sphericity, validity, fit and residual coefficients were estimated for the contrast of the hypothesis regarding the significant differences between the theoretical dimensions with respect to the observed dimensions. Values close to unity were assumed as evidence of reliability, validity, and fit.

Results

Figure 1 shows the confirmatory factorial structure of the instrument that measures the administration's perception of safety. Values close to unity can be seen between the indicators and the observable variables, as well as between the first-order factors with respect to a second-order factor that the literature identifies as a security expectation. In other words, the perception of public security is structured around four predominant dimensions: territorial-national, human-public, citizen-private, and internet user. That is, the literature from 2019 to 2022 reconfigured the dimensions that this study corroborated.

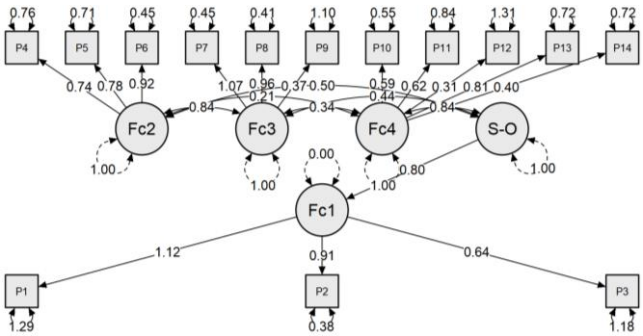

Source: Prepared with study data

Figure 1. *Confirmatory model of perceived safety against COVID-19.*

Figure 2 shows the relationships between the indicators of the exposed dimensions. A greater correlation can be seen between the indicators that make up the factors of private and Internet user security. In other words, the evidence shows that among the established dimensions, it is those related to the private and internet user dimensions that explain the administration's perception of security.

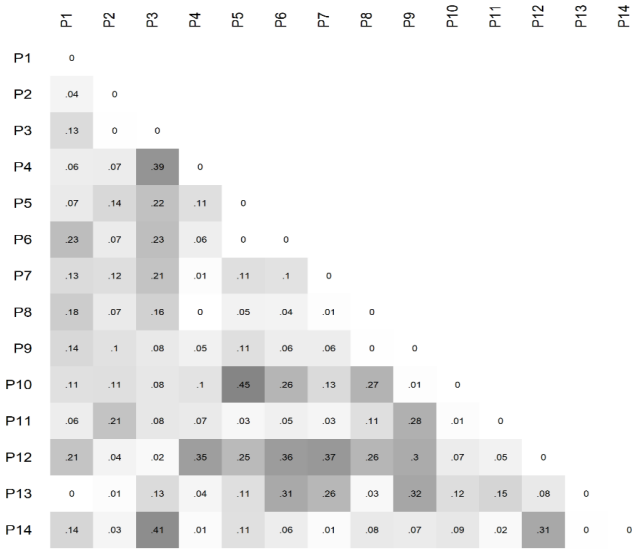

Source: Prepared with study data

Figure 2. *Covariance structure between the dimensions of perceived security against COVID-19.*

In summary, the findings suggest that the literature and the observations of the present study agree on a reconfiguration of the perception of security administration. In other words, the reduction in dimensions may be due to the fact that the relationship between the governing and the governed is compacted. In this way, the dimensions of most interest for the present study were the three pairs of combinations and the Internet user dimension. Specifically, Internet security management appears to reflect a policy of information containment.

Discussion

The contribution of this work to the state of the art lies in the confirmation of an explanatory factorial model of the administration's perception of security. Four factors related to the territorial-national, human-public, citizen-private dimensions were confirmed, as well as the Internet dimension endorsed as the central axis of the public agenda (Bustos et al., 2022). In relation to the literature published from 2019 to 2022, the instrument measures the reported dimensions. Studies of security administration perception warn that dimensions overlap in the OVID-19 era. The present work also established as a preponderant factor the Internet dimension as the bearer of the dimensions in its informative and communicative version of risks. Therefore, security and risk communication policies can benefit from the confirmed model, since the implementation of anti-COVID-19 strategies such as confinement and distancing suppose greater insecurity reflected in electronic networks.

Conclusion

The objective of this study was to confirm the factorial structure of the perception of security reported in the literature from 2019 to 2022. The results confirm four dimensions related to territory-nation, human-public, citizen-private and Internet user. The factor that explains the greatest variance was the Internet user, but the literature also suggests that in this dimension the other dimensions can be seen in terms of information and dissemination logic. Consequently, public policies related to Internet security such as the prevention of fraud, identity theft or personal data can reduce the differences between the governors and the governed with respect to the performance of the security administration.

References

1. Aguayo, JM, Valdes, J., Cordoba, VH, Nájera, M., Vázquez, FR, Muñoz, E., & García Lirios, C. (2022). Digital activism in students at a university in central Mexico in the COVID-19 era. *Advances in Mobile Learning Educational Research, 2* (1), 297-307. https://doi.org/10.25082/AMLER.2022.01.014
2. Bustos-Aguayo, J. M.., Juárez-Nájera, M., & García Lirios, C. (2022). Review of entrepreneurship in the COVID-19 era. *Revista Ingenio*, *19*(1), 60–66. https://doi.org/10.22463/2011642X.3173
3. Carreón Guillen, J., Blanes Ugalde, AV, & García Lirios, C. (2018). Reliability and validity of a perceived security governance model. *Journal of Academic Research Without Borders: Division of Economic and Social Sciences,* (27), 43. https://doi.org/10.46589/rdiasf.v0i27.176
4. Carreón Guillén J., Hernández Valdés J., Morales Flores M. de L., & García Lirios C. (2013). Hacia la construcción de una esfera civil de seguridad e identidad pública. *Eleuthera*, *9*, 99-115. Recuperado a partir

de https://revistasojs.ucaldas.edu.co/index.php/eleuthera/article/view/4921
5. Carreón Guillén, J., Hernández Valdés, J., & García Lirios, C. (2014). Prueba empírica de un modelo de establecimiento de agenda. *Acta Universitaria*, *24*(3), 50–62. https://doi.org/10.15174/au.2014.598
6. Carreón, Javier, Hernández, Jorge, de Lourdes Morales, María, Rivera, Bertha, & García, Cruz. (2013). Esferas civiles y campos de poder en torno a dimensiones de seguridad y violencia. *Revista de Psicología Universidad de Antioquia*, *5*(2), 9-18. Recuperada em 09 de junho de 2022, de http://pepsic.bvsalud.org/scielo.php?sc ript=sci_arttext&pid=S2145-48922013000200002&lng=pt&tlng=es
7. Carreón Guillén, J., Henández Valdés, J., Morales Flores, M. de L., Rivera Varela, B., Limón Domínguez, G. A., & García Lirios, C. (2017). Hacia la construcción de una esfera civil de seguridad e identidad pública. *Realidades Revista de la Facultad de Trabajo Social y Desarrollo Humano*, *4*(1), 23–35. Recuperado a partir de https://realidades.uanl.mx/index.php/realidades/article/view/26
8. Carreón Guillén, J., Lirios, C., Castro, A., Hernández, G., & Rubio, S. (2017). Gobernanza de la seguridad pública en la edificación de la identidad sociopolítica. *Revista De PsicologíA De La Universidad AutóNoma Del Estado De MéXico, 6*(12), 32-51. Consultado de https://revistapsicologia.uaemex.mx/article/view/13194
9. Coronado Rincón, O., Molina González, M. del R., Bolívar Mojica, E., Carreón Guillén, J., García Lirios, C.., & Rosas Ferrusca, FJ. (2022). Governance strategy to agree on the expectations of students at a public university to return to classes interrupted by the pandemic. *Journal of the Faculty of Law and Political Science, 52* (136), 319-338. https://doi.org/10.18566/rfdcp.v52n136.a13
10. Espinosa Morales, F., Sánchez Sánchez, A., Hernández Valdés, J., & García Lirios, C. (2020). Scenarios, phases, roles and discourses of internet violence in a higher education institution. *SUM. Disciplinary Journal in Economic and Social Sciences, 2* (1), 65-82. Retrieved from https://aunarcali.edu.co/revistas/index.php/RD CES/article/view/111
11. Espinoza-Morales, F., Sánchez-Sánchez, A., & García Lirios, C. (2022). Corporate reputation in a public university that trains public health social workers. *GEON Magazine (Management, Organizations and Business), 9* (1), e-747. https://doi.org/10.22579/23463910.747
12. Hernández Valdés, J., Juárez Nájera, M., Bustos Aguayo, J. M., Bermúdez Ruíz, G., Quintero Soto, M. L., Rosas Ferrusca, F. J., Rincón Ornelas, R. M., & García Lirios, C. (2021). Propuesta de categorías para la investigación documental retrospectiva sobre la adherencia al tratamiento. *Revista Med*, *28*(2), 11-24. https://doi.org/10.18359/ rmed.3835
13. Lirios, CG, Nájera, MJ, Aguayo, JMB, Vázquez, FRS, & Campas, CYQ (2020). Specification a model for study of perceived risk. *Eletrônica Em Gestão Magazine, Educação E Tecnologia Ambiental, 24,* e43. https://doi.org/10.5902/2236117045266
14. Martínez-Muñoz, E., López, S., & García-Lirios, C. (2019). Governance of perception of risk-benefit and intention to vote in favor of bikeways. *Academic Quorum, 16* (2), 114-152. Retrieved from https://produccionci entificaluz.org/index.php/quorum/article/view/30019
15. Molina Ruíz, H. D., Martínez Muñóz, E., Bustos Aguayo, J. M., Juárez Nájera, M., & García Lirios, C. (2019). REPRESENTACIONES SOCIOAMBIENTALES PERIURBANAS. *Kuxulkab'*, *26*(54), 05-12. https://doi.org/10.19136/kuxulkab.a26n54.3029
16. Sandoval-Vázquez, F., Juárez Nájera, M., Bustos-Aguayo, J., & García Lirios, C. (2022). Confirmatory model of environmental expectations in the COVID-19 era. *Journal of Academic Research Without Border: Division of Economic and Social Sciences,* (37). https://doi.org/10.46589/rdiasf.vi37.442

.

.